ESSENCE NEW
DESIGN + ENGINEERING
GROHE GERMANY

99.0277.131/ÄM 238956/12.16

www.grohe.com

Pure Freude an Wasser

GROHE

32 899
34 294

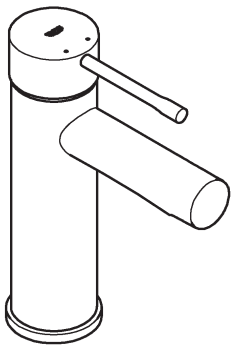

32 898

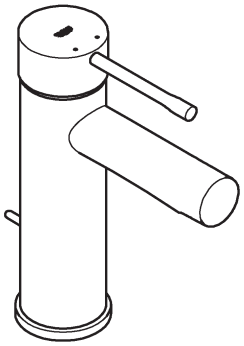

23 379

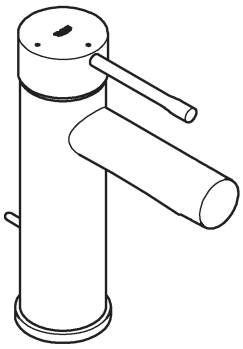

32 901

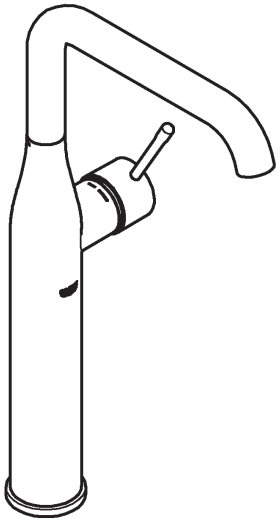

23 541
23 799

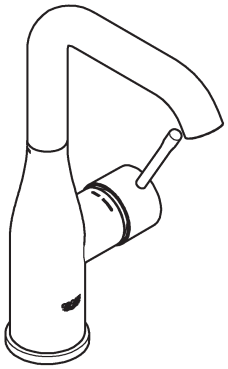

23 463
23 480
23 798

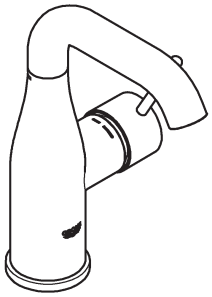

32 934

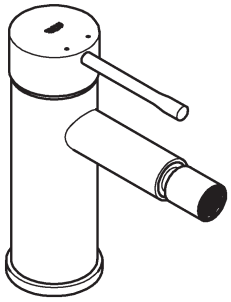

32 628

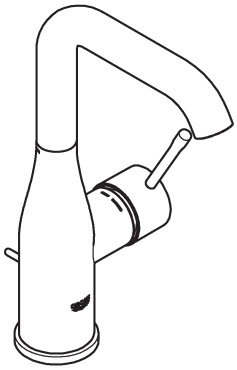

23 462

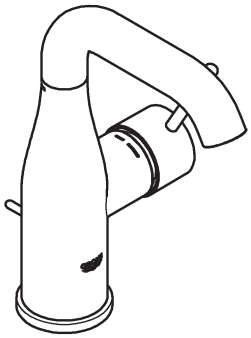

32 935

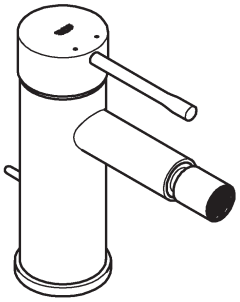

1

2 - 3

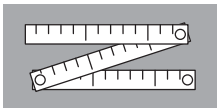

4 - 6

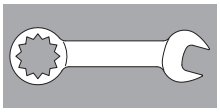

7

8

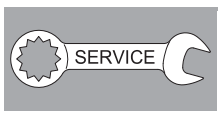

9

10

11

	32 899	34 294	32 898	23 379	23 541	23 799	23 463	23 480	23 798	32 934	32 628	23 462	32 935	32 901
	x	x	x	x										
							x	x	x			x		
					x	x					x			
										x			x	
														x
			x	x							x	x	x	
	x							x		x				
						x			x					
	x	x	x	x	x	x	x	x	x	x	x	x	x	x

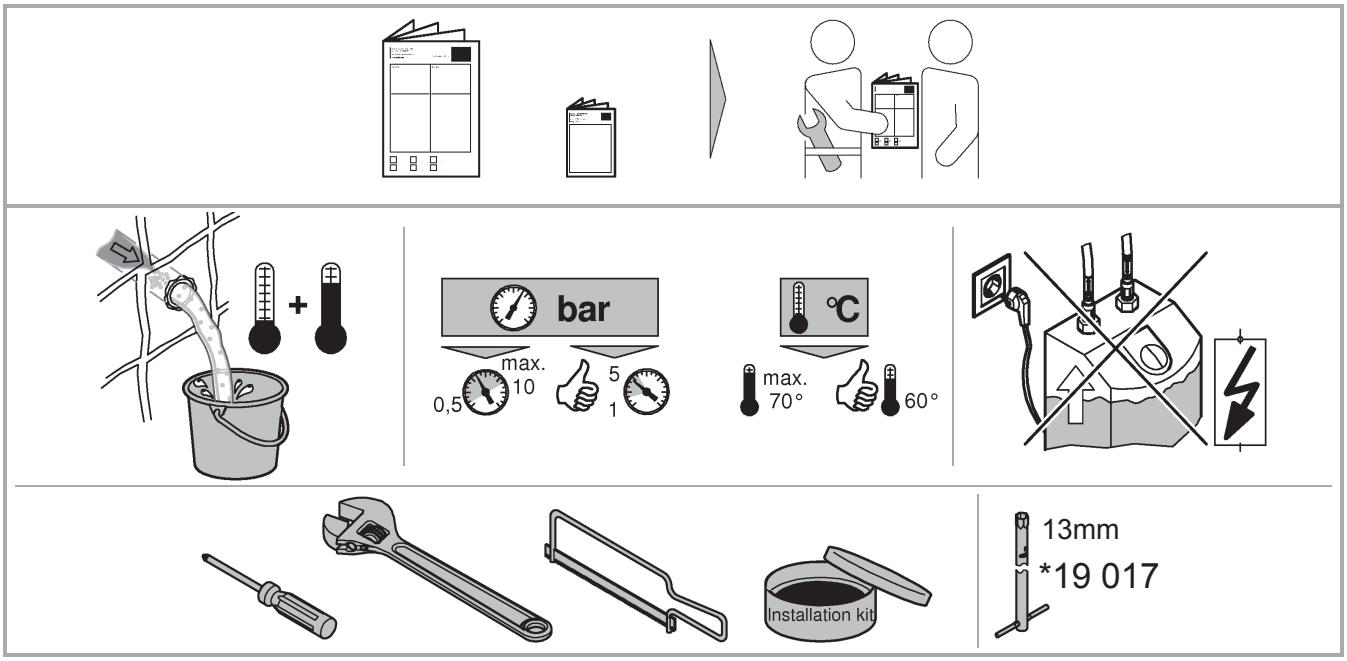

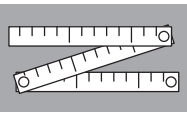

34 294

32 899

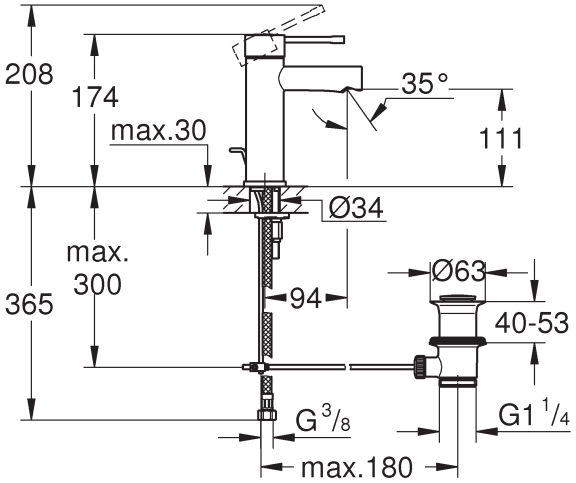

32 898

23 379

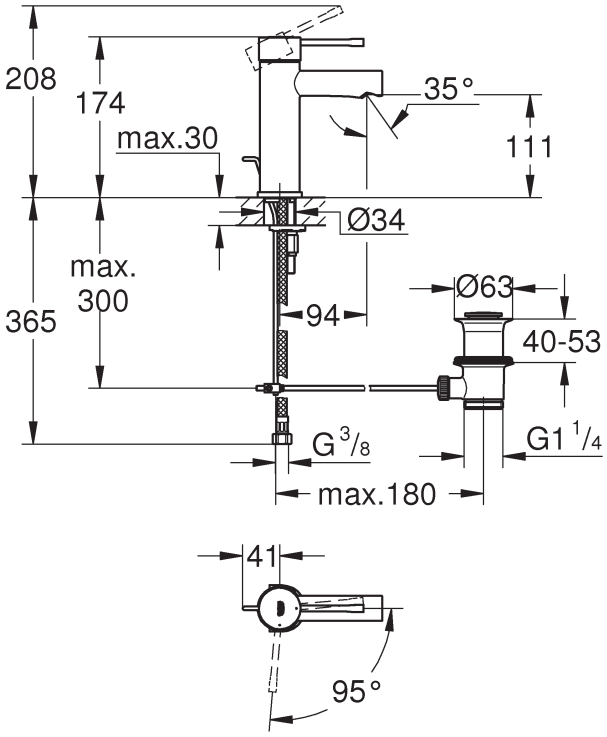

23 541

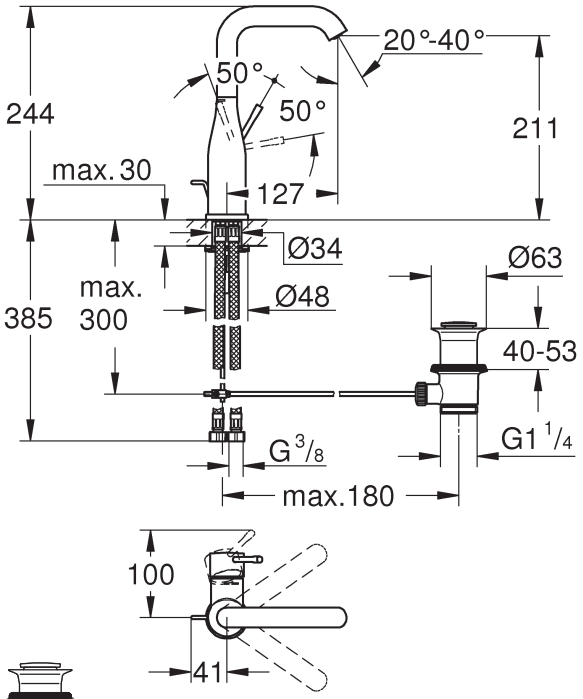

32 628

23 799

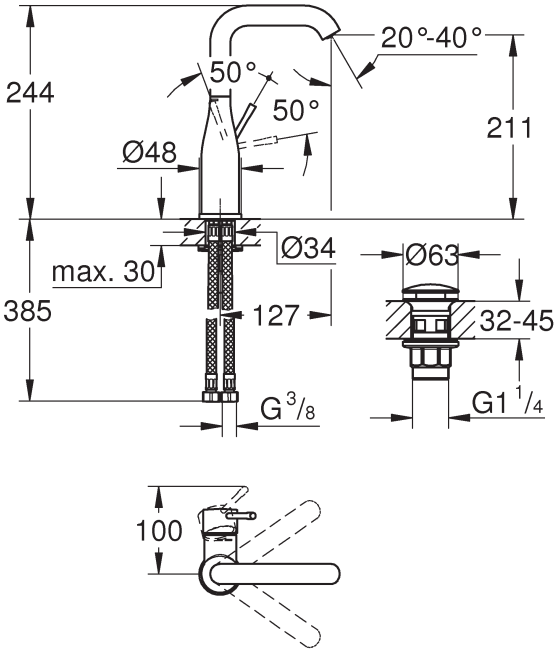

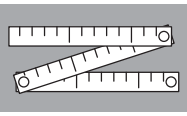

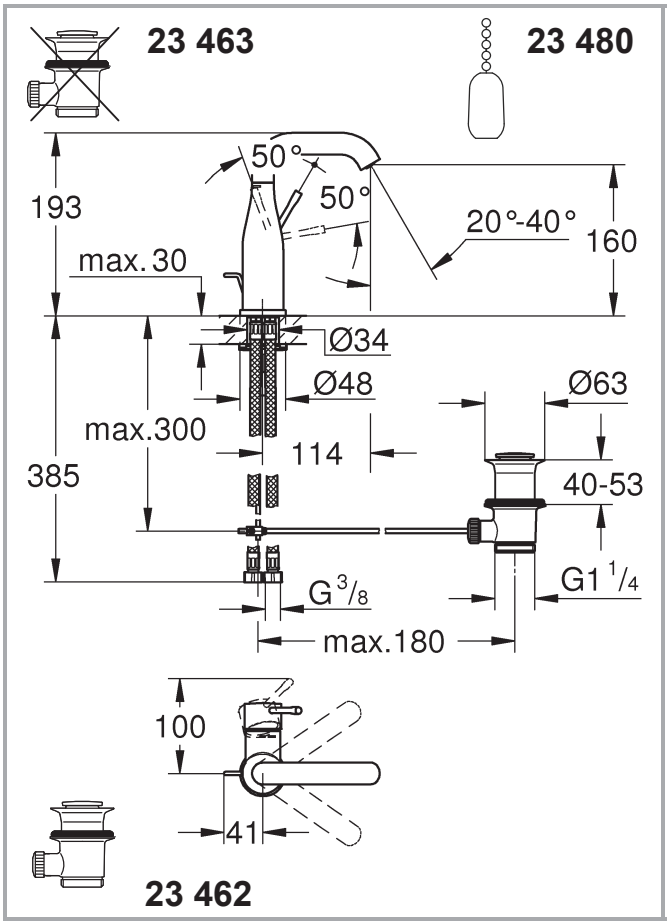
23 463
23 480
50°
50°
193
20°-40°
160
max. 30
Ø34
Ø48
Ø63
max.300
114
385
40-53
G 3/8
G1 1/4
max.180
100
41
23 462

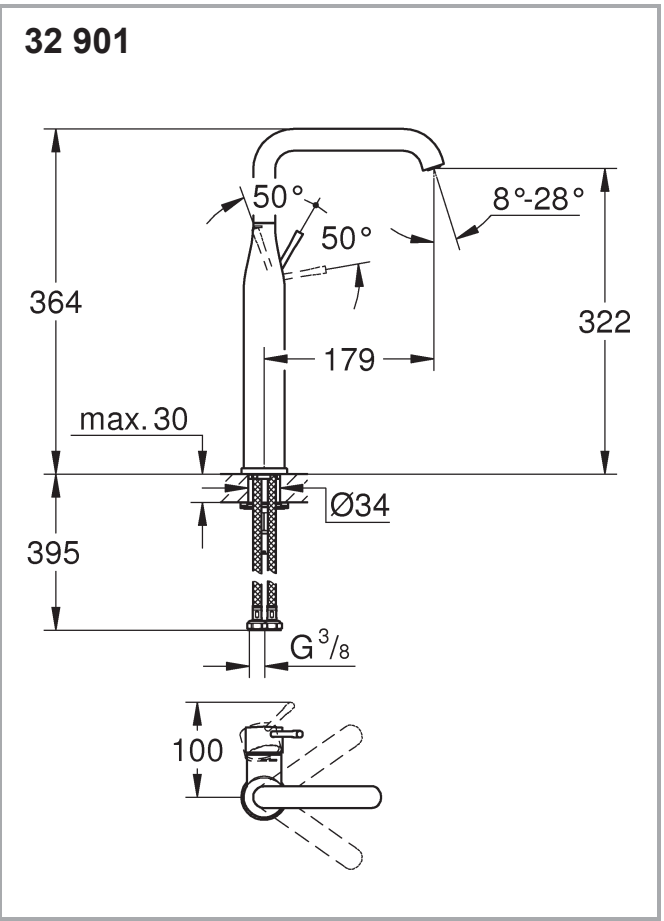
32 901
50°
50°
8°-28°
364
322
179
max. 30
Ø34
395
G 3/8
100

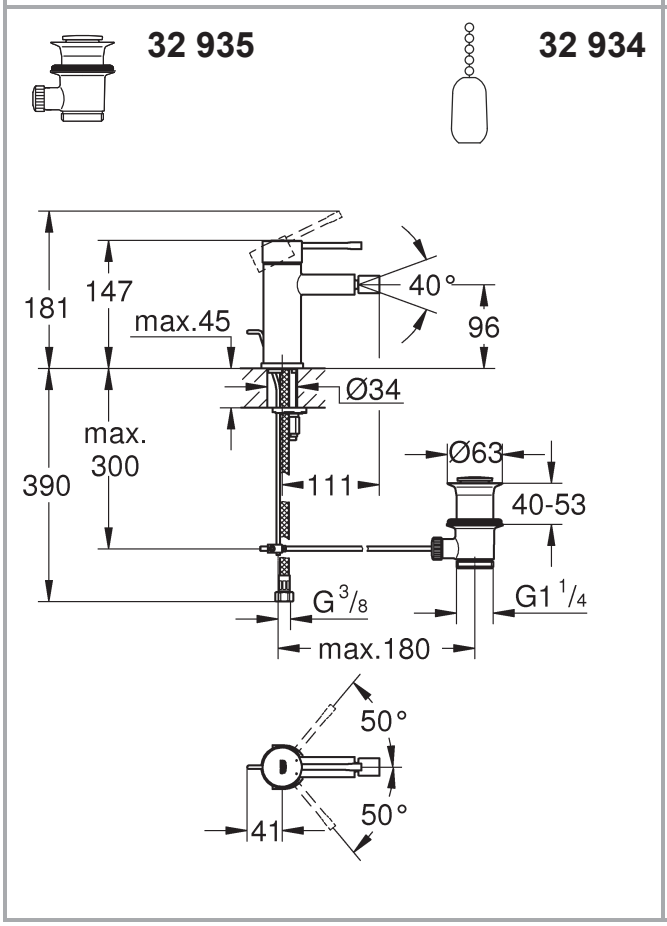
32 935
32 934
181
147
40°
max.45
96
Ø34
max.
300
390
Ø63
111
40-53
G 3/8
G1 1/4
max.180
50°
50°
41

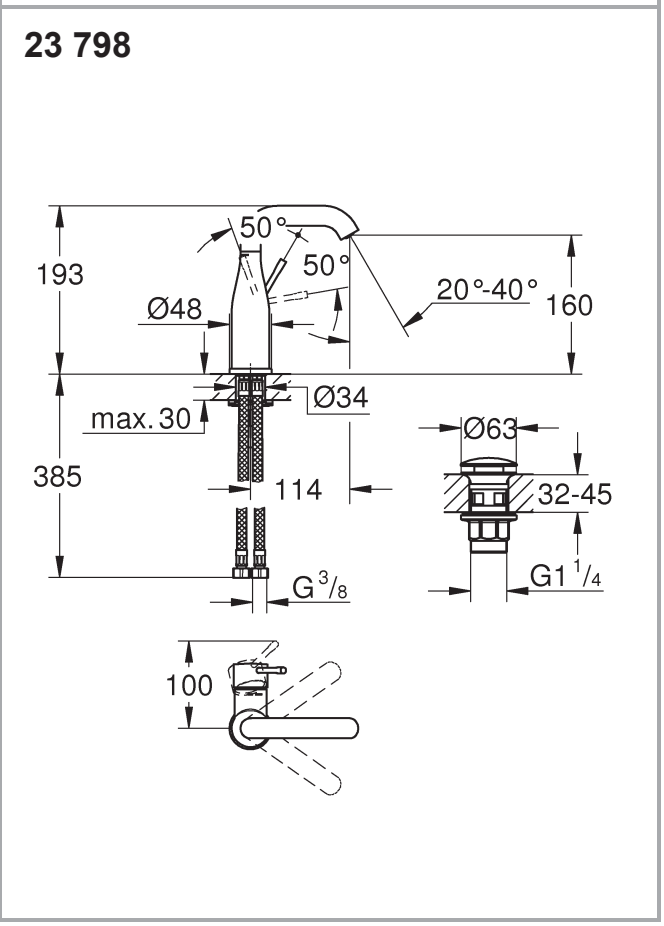
23 798
50°
50°
193
Ø48
20°-40°
160
Ø34
max. 30
Ø63
385
114
32-45
G 3/8
G1 1/4
100

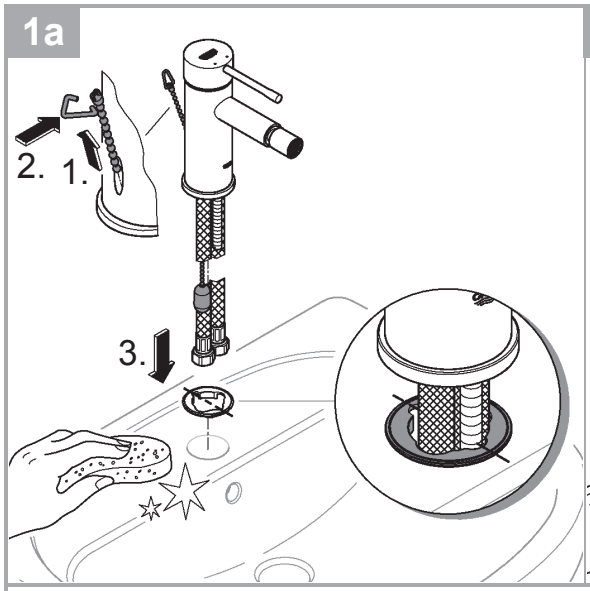
1a
2.
1.
3.

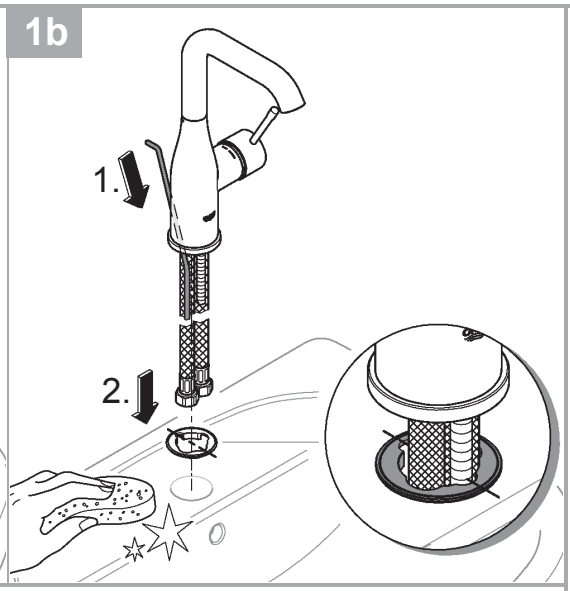
1b
1.
2.

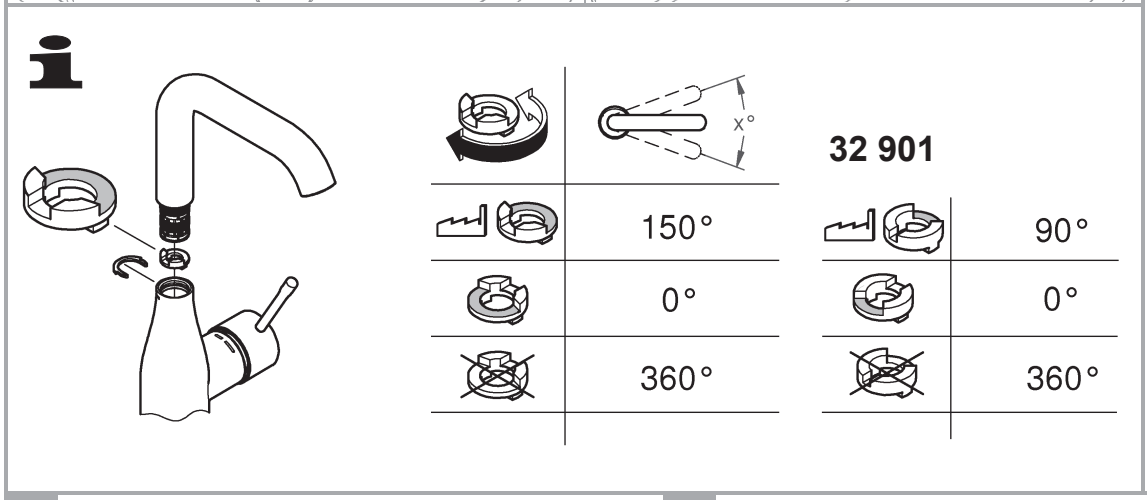
x°
32 901
150°
90°
0°
0°
360°
360°

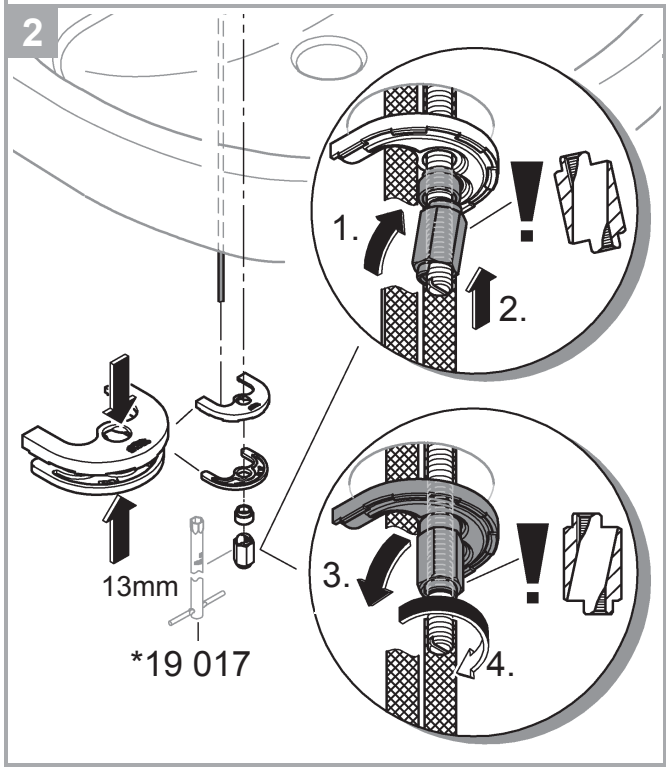
2
1.
2.
3.
4.
13mm
*19 017

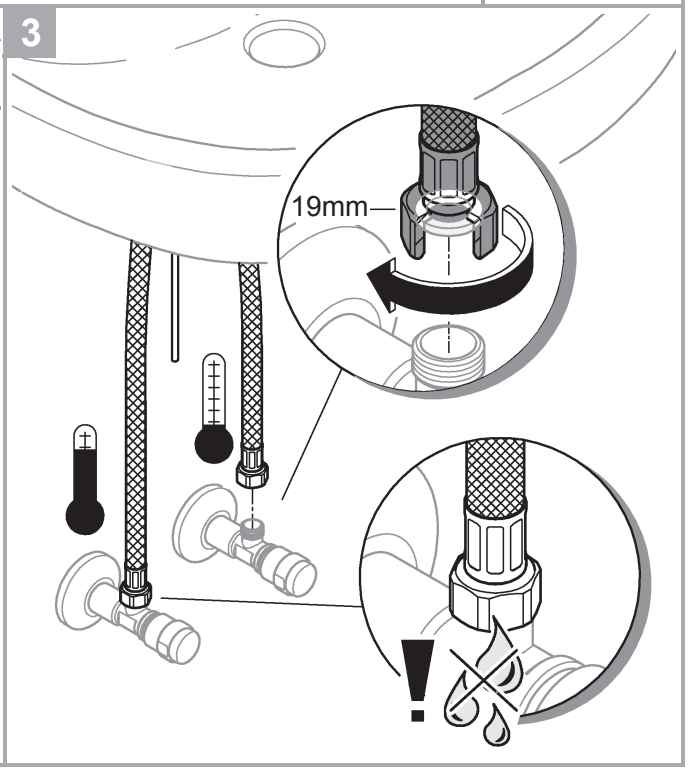
3
19mm

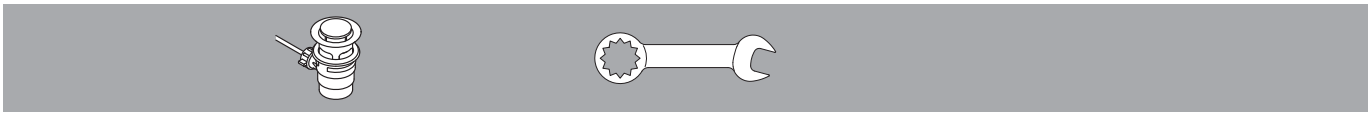

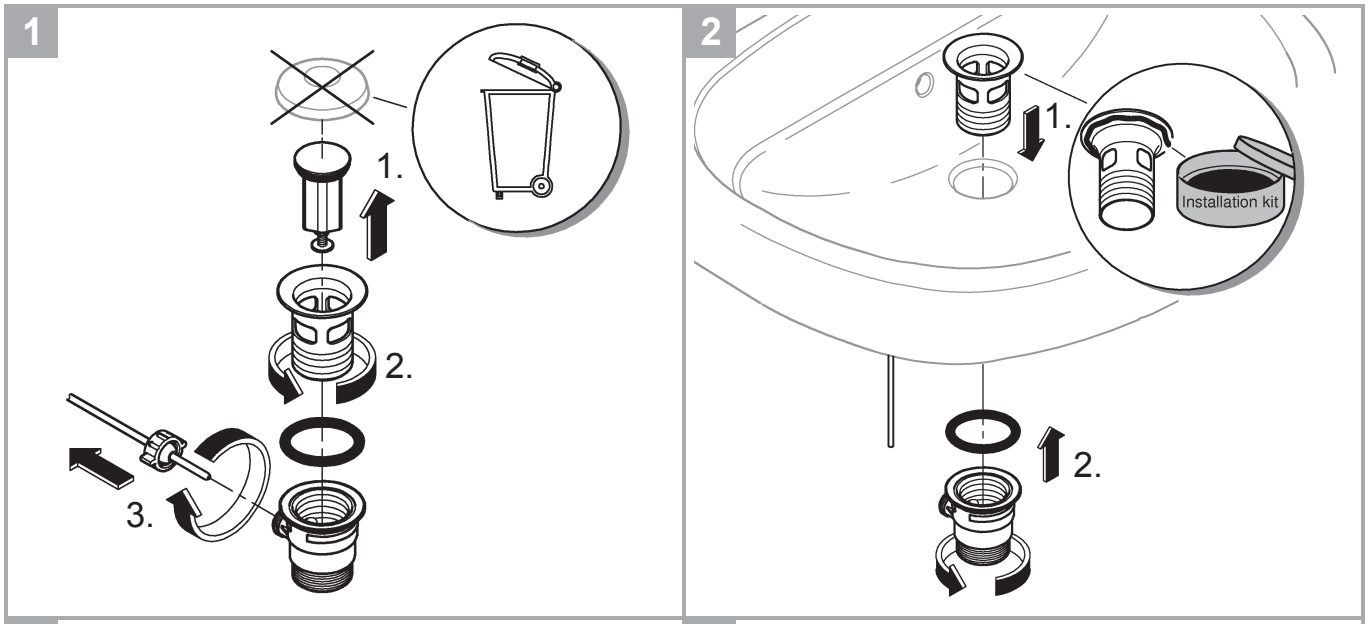
1
1.
2.
3.

2
1.
Installation kit
2.

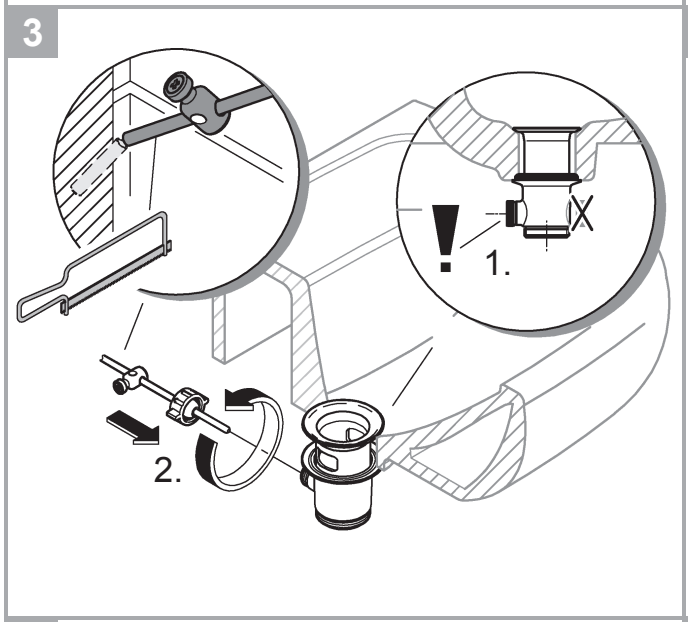
3
!
1.
2.

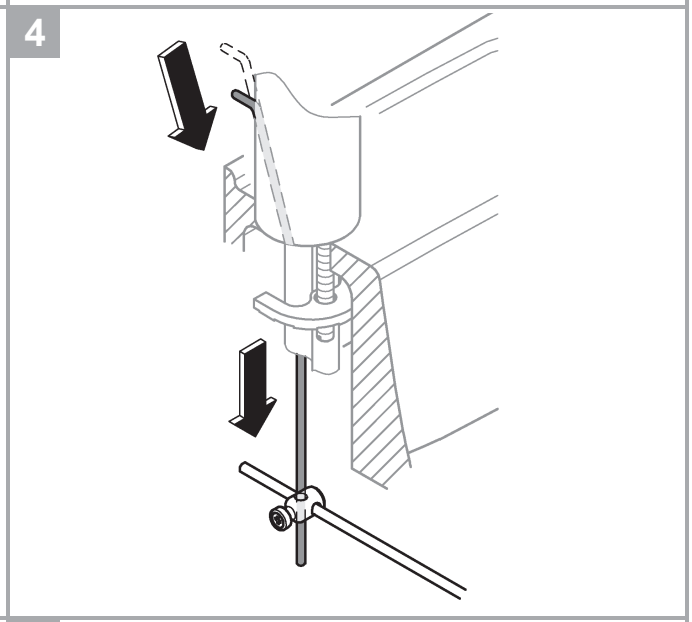
4

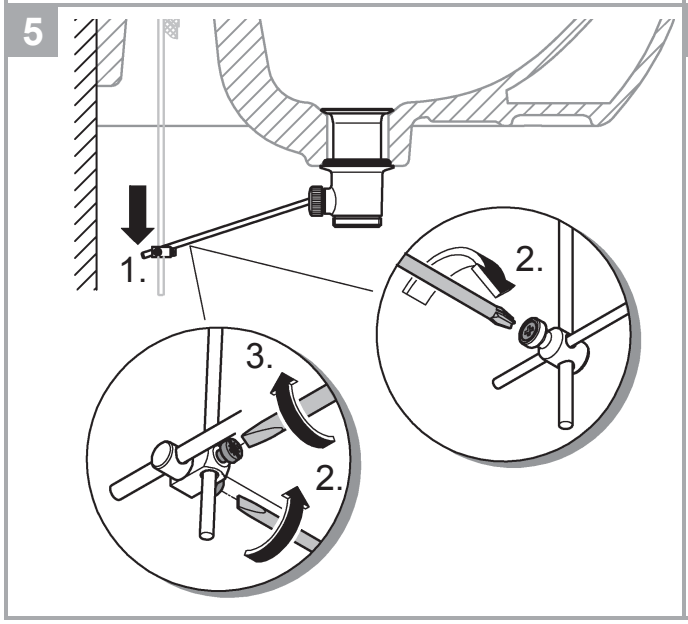
5
1.
2.
3.
2.

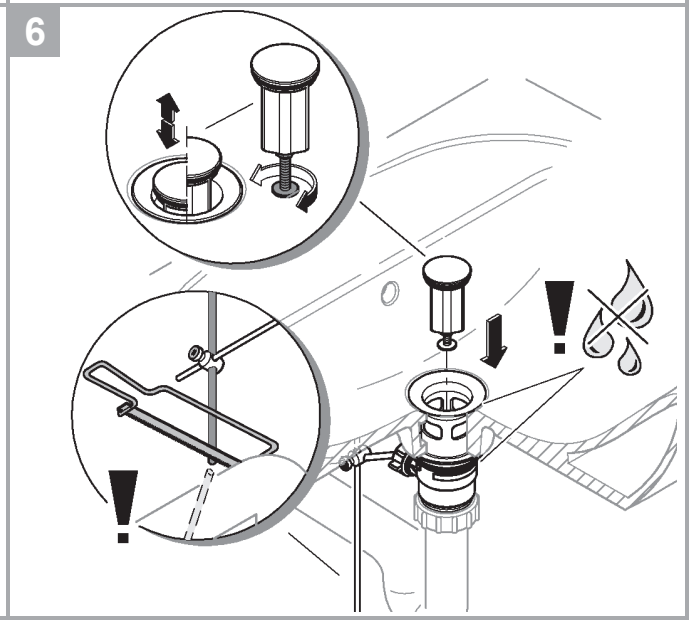
6
!
!

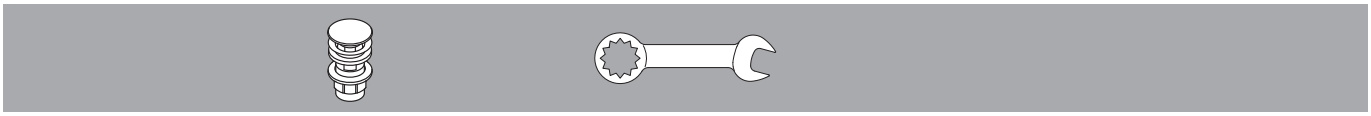

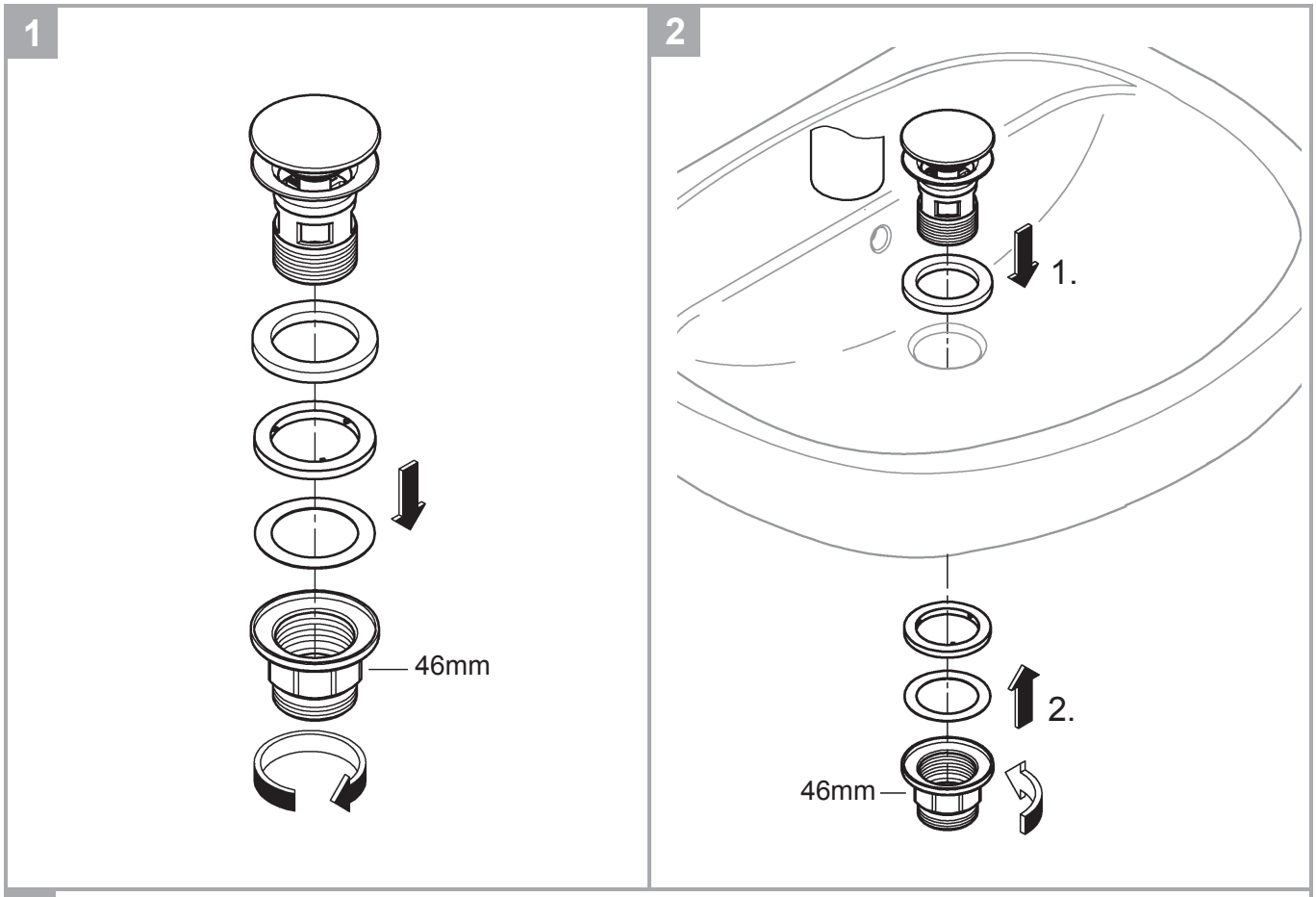
1
46mm
2
1.
2.
46mm

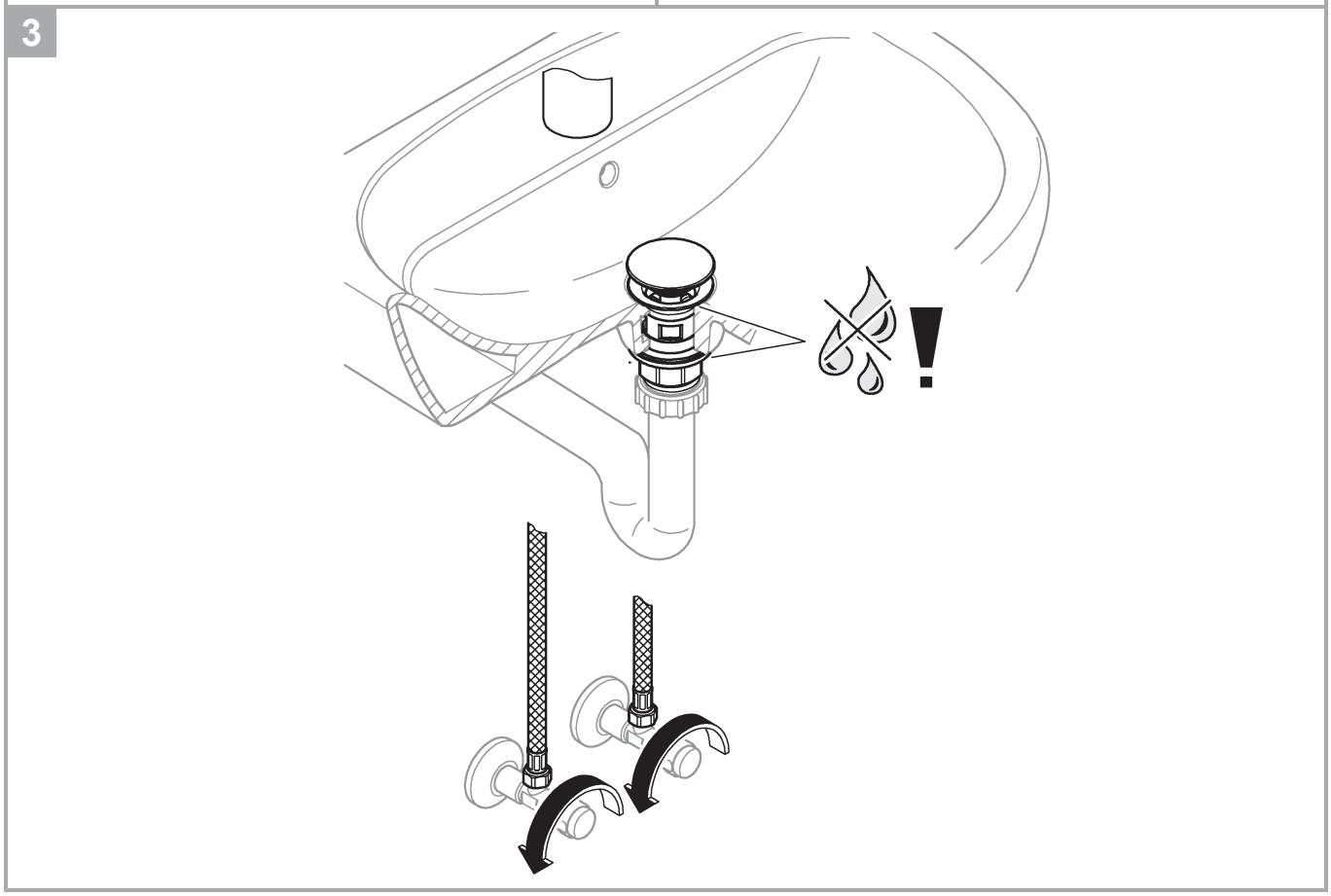
3
!

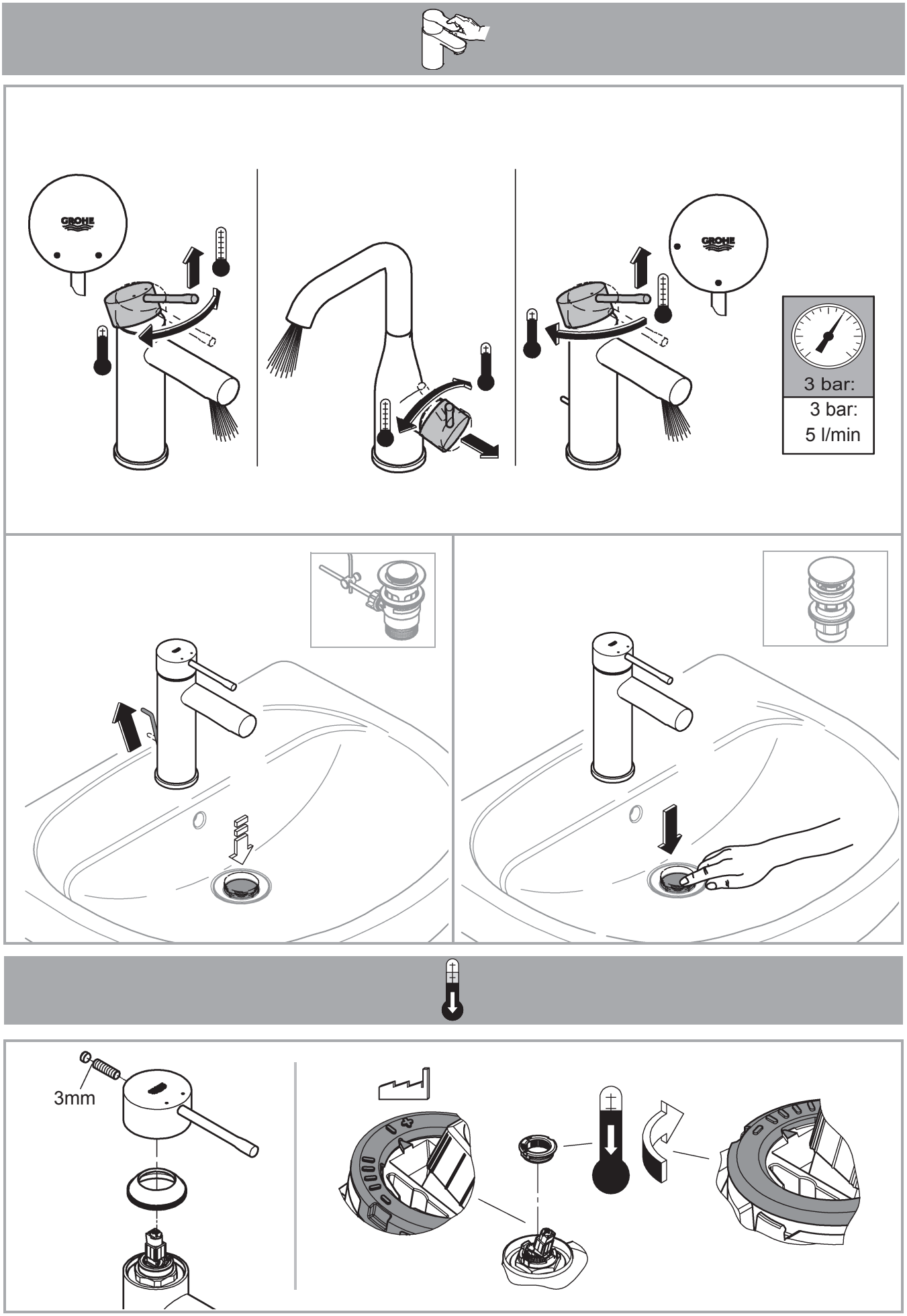
GROHE
GROHE
3 bar:
3 bar:
5 l/min
3mm

SERVICE

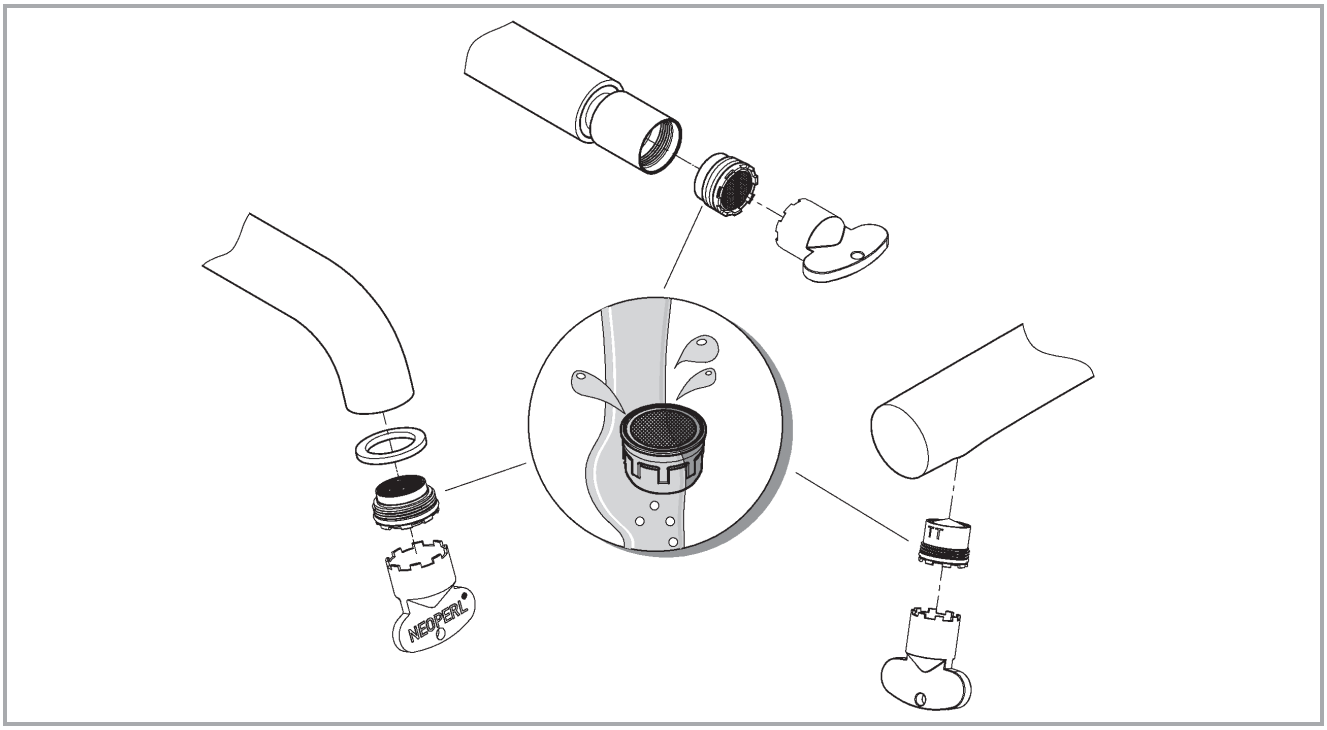
NEOPERL

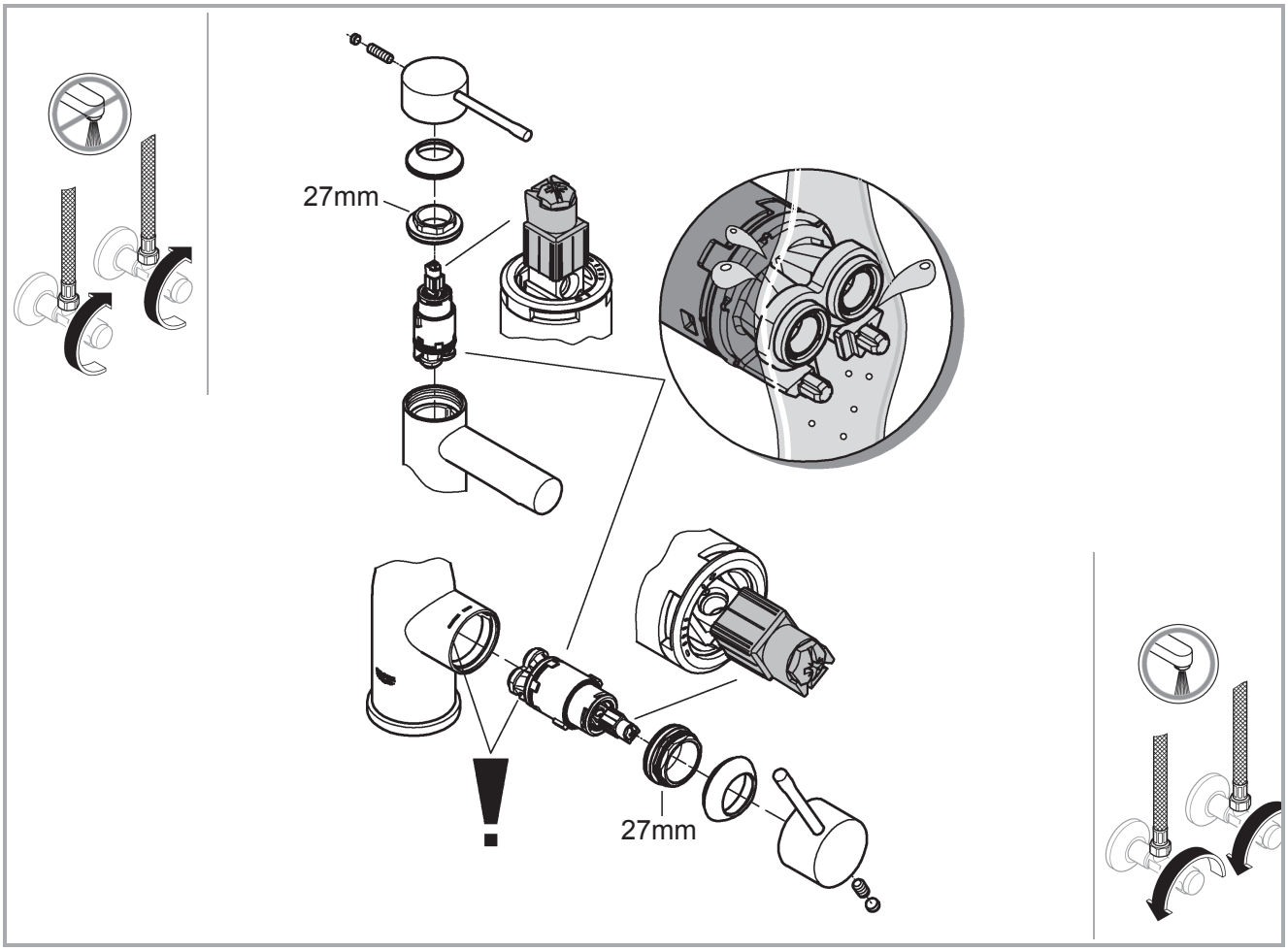
27mm
27mm

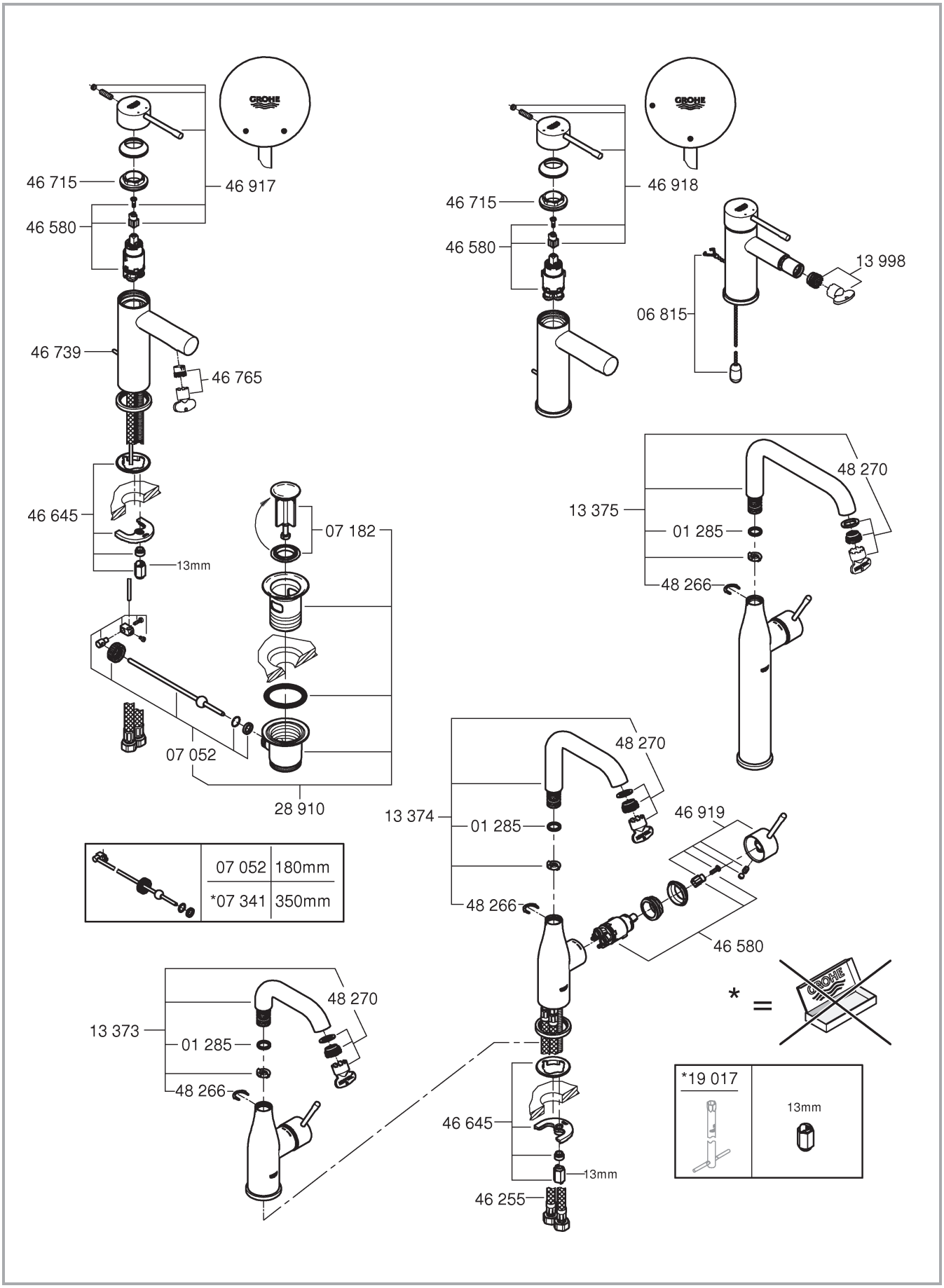
46 715
46 917
46 580
46 739
46 765
46 645
13mm
07 182
07 052
28 910
46 715
46 918
46 580
13 998
06 815
48 270
13 375
01 285
48 266
48 270
13 374
01 285
46 919
48 266
46 580
07 052 180mm
*07 341 350mm
48 270
13 373
01 285
48 266
46 645
13mm
46 255
*19 017
13mm
*

Pure Freude an Wasser

GROHE

D
✆ +49 571 3989 333
helpline@grohe.de

A
✆ +43 1 68060
info-at@grohe.com

AUS
✆ +(61) 1300 54945
grohe_australia@lixil.com

B
✆ +32 16 230660
info.be@grohe.com

BG
✆ +359 2 9719959
grohe-bulgaria@grohe.com

BR
✆ 0800 770 1222
falecom@grohe.com

CAU
✆ +99 412 497 09 74
info-az@grohe.com

CDN
✆ +1 888 6447643
info@grohe.ca

CH
✆ +41 44 877 73 00
info@grohe.ch

CN
✆ +86 4008811698
info.cn@grohe.com

CY
✆ +357 22 465200
info@grome.com

CZ
✆ +358 942 451 390
grohe-cz@grohe.com

DK
✆ +45 44 656800
grohe@grohe.fi

E
✆ +34 93 3368850
grohe@grohe.es

EST
✆ +372 6616354
grohe@grohe.ee

F
✆ +33 1 49972900
sav-fr@grohe.com

FIN
✆ +358 942 451 390
grohe@grohe.fi

GB
✆ +44 871 200 3414
info-uk@grohe.com

GR
✆ +30 210 2712908
nsapountzis@ath.forthnet.gr

H
✆ +36 1 2388045
info-hu@grohe.com

HK
✆ +852 2969 7067
info@grohe.hk

I
✆ +39 2 959401
info-it@grohe.com

IND
✆ +91 1800 102 4475
customercare.in@grohe.com

IS
✆ +354 515 4000
jonst@byko.is

J
✆ +81 3 32989730
info@grohe.co.jp

KZ
✆ +7 727 311 07 39
info-cac@grohe.com

LT
✆ +372 6616354
grohe@grohe.ee

LV
✆ +372 6616354
grohe@grohe.ee

MAL
info-malaysia@grohe.com

MX
✆ 01800 8391200
pregunta@grohe.com

N
✆ +47 22 072070
grohe@grohe.no

NL
✆ +31 79 3680133
vragen-nl@grohe.com

NZ
technicalenquiries@paterson
trading.co.nz

P
✆ +351 234 529620
commercial-pt@grohe.com

PL
✆ +48 22 5432640
biuro@grohe.com.pl

RI
✆ 0-800-1-046743
customercare-
indonesia@asia.lixil.com

RO
✆ +40 21 2125050
info-ro@grohe.com

ROK
✆ +82 2 1588 5903
info-singapore@grohe.com

RP
✆ +63 2 8938681

RUS
✆ +7 495 9819510
info@grohe.ru

S
✆ +46 771 141314
grohe@grohe.se

SGP
✆ +65 6311 3611
info-singapore@grohe.com

SK
✆ +420 277 004 190
grohe-cz@grohe.com

T
✆ +66 21681368
(Haco Group)
info@haco.co.th

TR
✆ +90 216 441 23 70
GroheTurkey@grome.com

UA
✆ +38 44 5375273
info-ua@grohe.com

USA
✆ +1 800 4447643
us-customerservice@grohe.com

VN
✆ +84 90 9694768
✆ +84 90 9375068
info-vietnam@grohe.com

AL BiH HR KS ME MK SLO SRB
✆ +385 1 2911470
adria-hr@grohe.com

Eastern Mediterranean,
Middle East - Africa
Area Sales Office:
✆ +357 22 465200
info@grome.com

IR OM UAE YEM
✆ +971 4 3318070
grohedubai@grome.com

Far East Area Sales Office:
✆ +65 6311 3600
info@grohe.com.sg

Latin America:
✆ +52 818 3050626
pregunta@grohe.com

www.grohe.com
2016/09/28